AIRCRAFT TOOLS AND EQUIPMENT

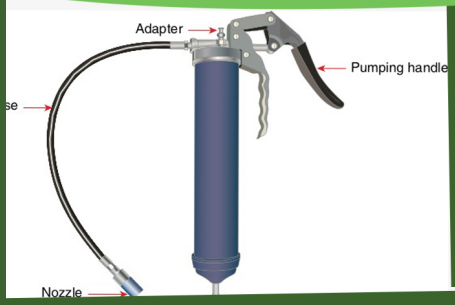

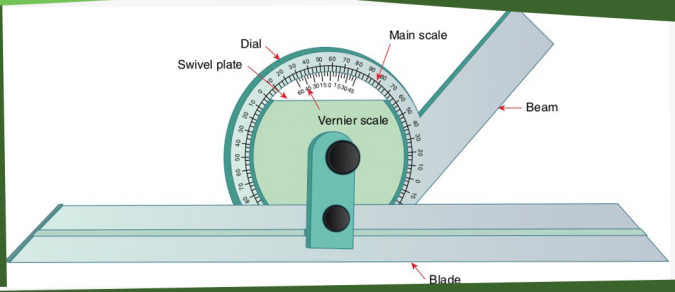

PREM MAHENDRANATHAN

AIRCRAFT TOOLS AND EQUIPMENT

Copyright Page
[To Come]

Tools and Equipment

Aircraft maintenance personnels use a wide range of hand and machine tools in their career. A person who desires to become an aircraft mechanic should develop his/her skills to properly select and use appropriate tool for job he/she intended to carry out.

Good understanding of usage and maintenance of tools will help you to complete the task on time with limited or no mistakes.

Whenever you are assigned a job to use tools that you are not familiar with, read the description, illustration, general rules, and maintenance procedure for the tools involved. Practice using the tool few times until you are confident to use.

Do not mishandle or use a wrong tool for the task.

TOOLS

Tools can be classified as hand tools, machine tools, and further classified as power tools, electrical tools and electronic tools

Hand Tools

Following are the common hand tools used for various task:

Hammers

Hammer is mainly used to deliver a blow to an object, usually used to drive nails. The common hammer features a heavy metal head attached to a handle.

Hammers are generally classified based on the type of head and weight. Metal head hammers are the hard ones that are made up of high carbon steels.

Parts of a typical hammer

The typical hammer is made of a wooden handle and metal head.

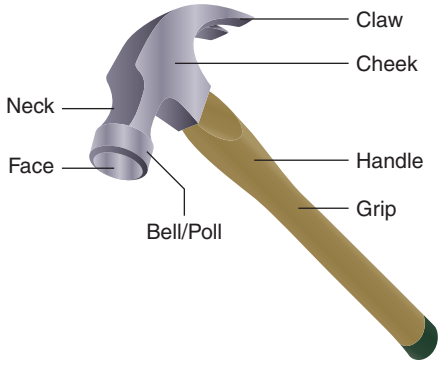

FIGURE 1 Common parts of hammer

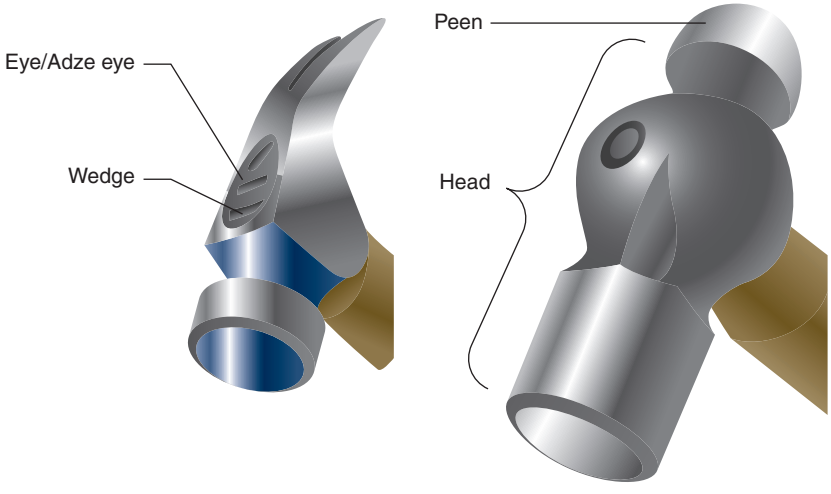

FIGURE 2 Parts of hammer head

Types of Hammer

Claw Hammer: This is the common type and can be used for various tasks such as pounding nails into and extracting nails. The claw is curved and has a V-cut that draws the nails out.

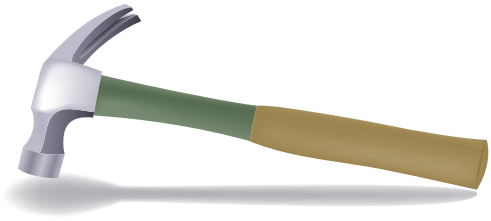

FIGURE 3 Claw hammer

Ball Peen Hammer: This hammer is also known as mechanist's hammer or engineer's hammer. It is a peening hammer with one end shaped like an ordinary hammerhead while the other end is ball shaped. It is mainly used in striking and shaping metals especially in metal fabrication. It is the best choice to set rivets in metal by hand.

FIGURE 4 Ball peen hammer

Cross Peen Hammer: This hammer is used for starting panel pins and tacks, especially for use where the working area access is limited. The

peen is at right angles to the shaft and allows you to tap the nail between your fingers without striking a finger.

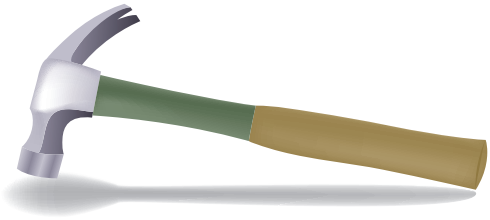

FIGURE 5 Cross peen hammer

Straight Peen Hammer: This hammer is mainly used for shaping metal and the peen is in-line with the shaft.

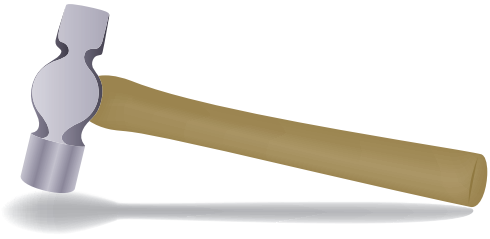

FIGURE 6 Straight peen hammer

Riveting Hammer: This hammer is used for swaging down rivets and beating metal sheets. It has a flat face and a narrow peen.

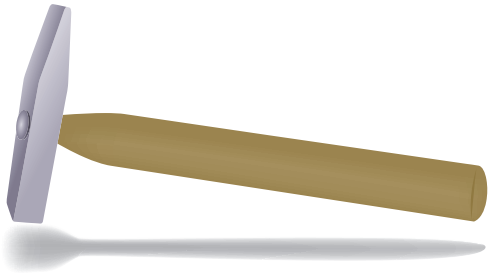

FIGURE 7 Riveting hammer

Nylon Faced Hammer: This hammer is used to deliver blows to the work without causing damage to the surface.

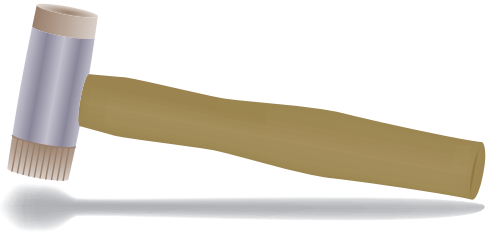

FIGURE 8 Nylon faced hammer

Recommended practices when using a hammer

The following are the aspects that must be ensured when using hammers.

- Always use the correct hammer that is best suited for the job.
- Ensure that the handle is fitted tight.
- Ensure the hammer faces are free from chips and dents.
- Wear safety goggles when using a metal hammer.
- Hold the handle at the farthest position away from the head.
- Use the forearm as an extension of the handle when striking a blow.
- Swing the hammer by bending the elbow, not the wrist.

Mallet

A mallet is a hammer like hand tool with a striking surface made of wood, hickory, hard rubber, plastic or rawhide. These hammers should not be used for striking hard metals, as it will damage the hammerhead. The wooden mallets must be used when pounding a wood chisel.

Screwdrivers

The screwdrivers are used for loosening or tightening screws or screw head bolts. The handles are usually made of wood or plastic. There are different types of screwdrivers available based on its shape, blade type and blade length.

The main types of screwdrivers are given below.

Common Screwdriver: It is a flat bladed type screwdriver and is used only where slotted head screws or fasteners are found on aircraft. The blade is made up of high carbon or alloy steel. The end is ground flat to fit the slot cut in the head of the screw.

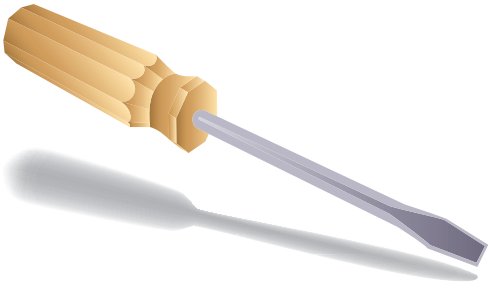

FIGURE 9 Common screwdriver

Ratchet Screwdriver: A useful tool with a user-friendly selection of bits in a screwdriver set. It has a selector that allows the ratchet to be locked and removed.

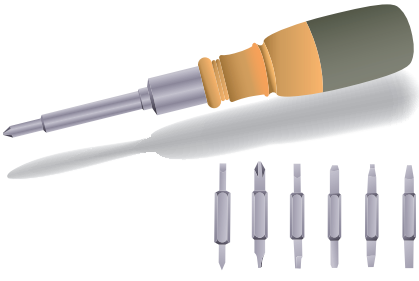

FIGURE 10 Ratchet screwdriver

Pump Screwdriver: It is operated based on the Archimedes principle. When the handle is pumped, the screwdriver turns accordingly.

FIGURE 11 Pump screwdriver

Offset Screwdriver: It has the blade at right angles to the shaft and is used when vertical space is limited. By using alternate ends, most screws can be seated or loosened even when the swinging space is limited.

FIGURE 12 Offset screwdriver

Watchmaker's Screwdriver: It has a long thin blade with a flat plastic handle and used for smaller screws such as in electric work.

FIGURE 13 Watchmaker's screwdriver

Electric Screwdriver: These are usually re-chargeable and are battery-operated. The electric motor can be controlled in such a way it can provide varying speed and torque output. The screw bits are supplied in different shapes and sizes that fit into an adapter.

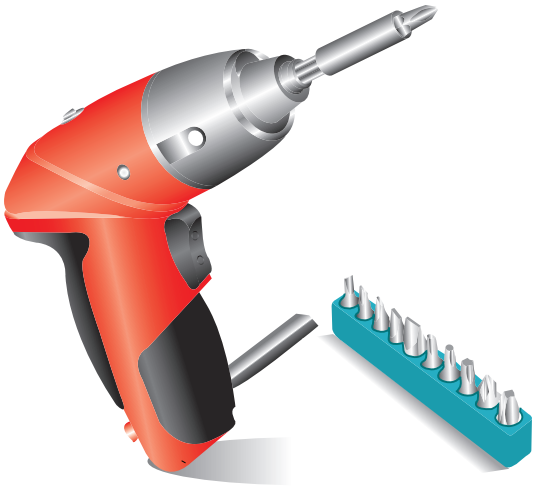

FIGURE 14 Electric screwdriver

The following are some of the screw heads of commercial screwdrivers available in the market.

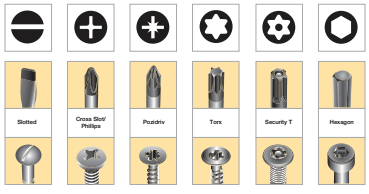

FIGURE 15 Types of screw heads

The following are the aspects that must be ensured when using screwdrivers.

- Always use the correct screwdriver that is best suited for the job.
- All screw slots should be cleared of dirt/paint before applying the screwdriver head.
- Make sure the shaft is aligned with the screw during use.
- Never grind the flat blade to a chisel head.
- Ensure that a common screwdriver fills at least 75% of the screw slot.
- Always use a correct sized screwdriver, as the use of wrong sized blade may damage adjacent structures.

- Do not use the screwdrivers for chiseling or prying.
- Do not use a screwdriver to check an electric circuit as it burns the tip.
- Always rest the screwdriver on a workbench when using it on a small part.
- Extra care must be taken when using electric screwdrivers. For best usage, the screw should be started by hand and carried on using the machine.

Pliers

Pliers are usually made of high carbon steel with the jaws hardened and tempered. They are used for twisting and cutting wires and for holding objects firmly. Also useful for compressing a wide range of materials. The overall length of pliers usually ranges from 5 to 12 inches.

The main types of pliers that are used more frequently in aircraft repair work are discussed below.

Diagonal Cutting Plier: They are referred as *diagonals* or *dikes* and are used to cut soft wire, rivets, small screws and split pins. It is a short-jawed cutter with a blade set at a slight angle on each jaw. The diagonal cutting pliers are used extensively in aviation safety systems.

FIGURE 16 Diagonal cutting plier

Round Nose Plier: These snip pliers are used for twisting metal wires and not intended to use in heavier tasks.

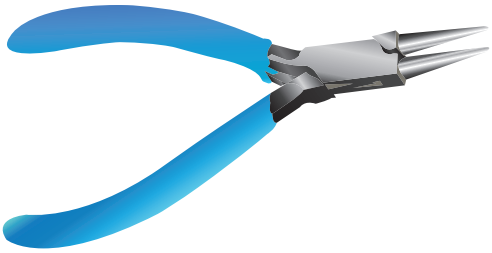

FIGURE 17 Round nose plier

Needle Nose Plier: It has half round jaws of varying lengths and are used to hold objects to make adjustments in limited access areas.

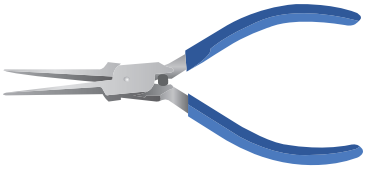

FIGURE 18 Needle nose plier

Cable Stripping Plier: It is used to remove the insulation from electrical cables.

FIGURE 19 Cable stripping plier

Duckbill Plier: Its jaws are thin, flat and resemble a duck's bill. These types of pliers are exclusively used for twisting safety wire.

FIGURE 20 Duckbill plier

Circlip Plier: It is used for removing/refitting both internal and external circlips. Straight and reversible bent circlips are available.

FIGURE 21 Circlip plier

The following are the main aspects that must be ensured when using pliers.

- Do not make pliers work beyond their capacity.
- Do not use pliers to turn nuts as it can damage them.

Punches

Punches are used to punch holes in metal sheet, to locate centers for drawing circles, to start holes for drilling, to transfer location of holes in patterns and to remove damaged rivets and pins.

They are generally classified according to the shape of their points as discussed below.

Center Punch: It is made of high carbon steel hardened and tempered. It has a point ground to an angle of 60o and are used to make large indentations in metal, which necessary to start a twist drill. The titanium should not be center punched as it sets up high internal stresses. Never use a center punch to remove objects from holes because the point of the punch will spread the object causing it to bind even more.

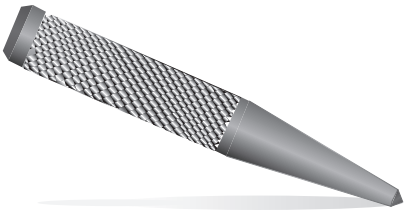

FIGURE 22 Center punch

Prick Punch: It is used to place reference marks on metal to transfer dimensions from a paper pattern directly on to the metal. To do this, first place the paper pattern directly on the metal. Then go over the outline with the punch, tapping it gently with a small hammer thus making slight indentations on the metal at the major points. These indentations serve as reference marks for cutting the metal. Never strike a heavy blow with the hammer as it may cause the prick punch to bend or cause major damage to the work material.

FIGURE 23 Prick punch

Pin Punch: It is used to drive the pin or bolt the way out of the hole. Stubborn pins may be started by placing a thin piece of scrap copper, brass or aluminium directly against the pin and striking it with a hammer until the pin begins to move. The *parallel pin punch* or *drive punch* is used to drive out rivets, bolts, split pins and shackle pins. The *tapered punch* or *drift punch* is used to deliver a blow to a part where access to a hammerhead would be difficult.

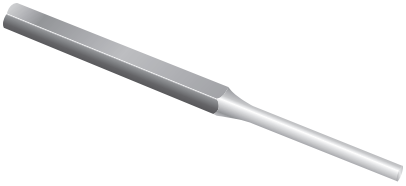

FIGURE 24 Pin punch

Transfer Punch: It is usually 4 inches long and is used to transfer the location of holes through a template. It has a point that initially tapers, then runs straight for a short distance in order to fit the drill-locating hole.

FIGURE 25 Transfer punch

Hollow Punch: It is also known as *hole punch* and is used to make small holes in soft materials. The slot in the side allows the removal of the hole centers.

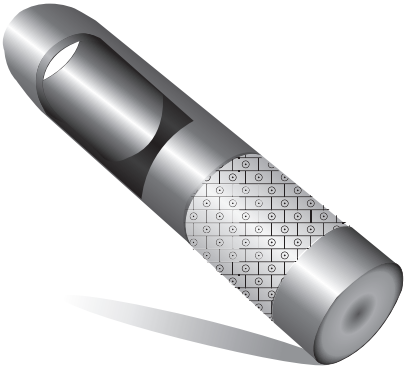

FIGURE 26 Hollow punch

Rivet Punch: It is used in the forming of snap-head rivets. These punches are also known as *set-ups,snaps* and *dollies*.

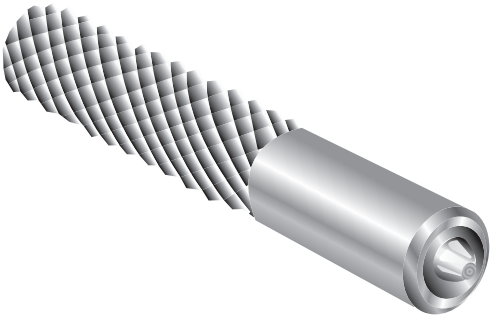

FIGURE 27 Rivet punch

Wrenches

A *wrench* or *spanner* is used to provide grip and mechanical advantage in applying torque to turn objects. They are available in a variety of forms and the size marked on them relates to the size of the nut/bolt or the distance across the flats.

The various types of wrenches/spanners are discussed below.

Open-End Wrench: It is made of high carbon steel like most of the hand tools and comes in different sizes. The length is indicative to the torque to be applied to the nut/bolt. The greater the size, the longer the wrench.

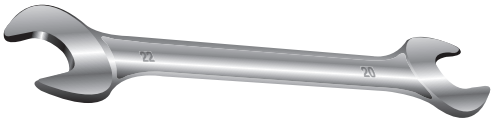

FIGURE 28 Open-end wrench

Box-End Wrench: It can completely surround the nut/bolt head and can be used in places having as little as 15^0 swing. Although these wrenches are ideal to break loose or pull tight nuts, time is lost turning the nut off the bolt once the nut is broken loose. This can be avoided when there is sufficient clearance to rotate the wrench in a complete circle.

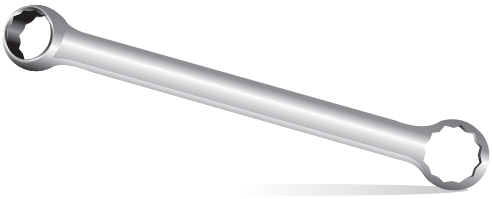

FIGURE 29 Box-end wrench

Combination Wrench: It has a box-end on one end and an open-end of the same size on the other end. After the tight nut is moveable, it can be completely unscrewed more quickly with an open-end wrench than with the box-end type.

FIGURE 30 Combination wrench

Ring Wrench: It gives full closure to the bolt head. Each corner has an angle of aperture and is usually bi-hexagonal to facilitate its use when angular movement is restricted. These are commonly available as double-ended types to fit nuts of consecutive sizes.

FIGURE 31 Ring wrench

Ratcheting Wrench: It swings back and forth in order to remove a nut from a bolt. The ratchet tightens or loosens the nut/bolt by pushing or pulling in one direction. It allows the ratchet handle to be re-positioned for another turn while still attached to the nut/bolt. Thus it does the job without disconnecting the tool from the fastener.

FIGURE 32 Ratcheting wrench

Box Wrench: It is a fully-enclosed type cylindrical wrench with a hexagonal end is used where the access area is restricted to the centre line of the screw axis. A steel part called *tommy bar* is used as a lever is placed through the shaft of the spanner to provide leverage.

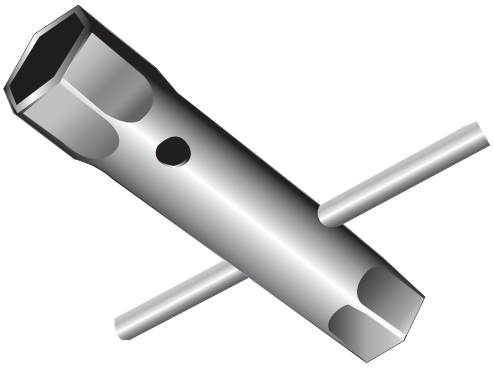

FIGURE 33 Box wrench

Allen Wrench: It is a L-shaped or hex-shaped, solid type wrench that is usually made of unbreakable chrome-vanadium steel. Non-adjustable and designed to fit a nut or bolt head internally. Thus the contact surfaces of the nut/bolt are protected from any external damages. These wrenches can be used with a headless screw and also known as *hex keys* or *Allen keys*.

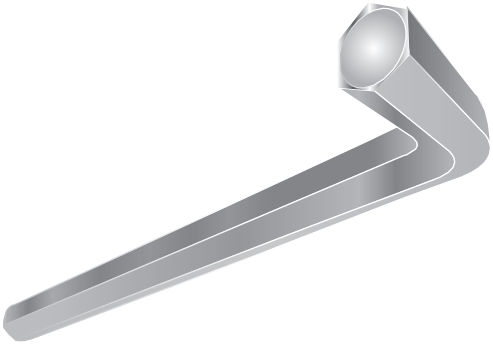

FIGURE 34 Allen wrench

Socket Wrench: It comprises of two parts namely a socket and a handle that are held together by a light spring-loaded poppet. The socket aperture is bi-hexagonal at one end and square at the other end in order to accommodate various attachments that comes with the tool. Handles are either fixed or detachable. The fixed handles have either 1, 4 or 6 sided recess to fit a nut/bolt head. The detachable handle types usually come in sets and fit several types of handles such as the T-shaped, ratchet, screwdriver grip and speed handles. The extensions that comes with the wrench make

it possible to use these tools in various locations and positions. These wrenches are used for tightening and loosening nuts of different sizes.

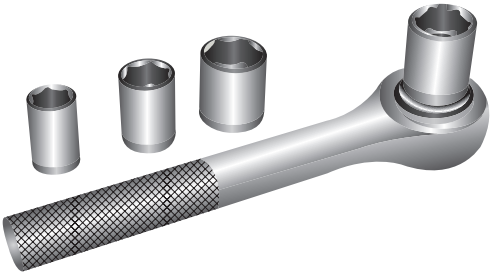

FIGURE 35 Socket wrench

C-Spanner: It is used on ring nuts with recesses cut around the circumference to accommodate the lug of the spanner. This wrench has a curved arm with a hook on the end that fits into one of the notches on the nut and so also known as *hook spanner*. It is also available in adjustable types that fits nuts of various diameters.

FIGURE 36 C-spanner

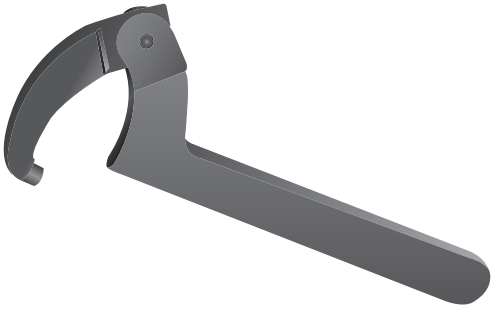

FIGURE 37 Hook spanner

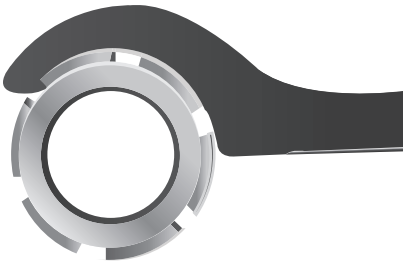

FIGURE 38 C-hook spanner

Peg Wrench: It has two round pegs protruding from the flat surface to engage in corresponding holes in special nut plates. These are also called as *face spanners*.

FIGURE 39 Peg wrench

Adjustable Wrench: It has a jaw of adjustable width thus allowing it to be used with different sizes of nuts, bolts and fastener heads. When using any adjustable wrench, always exert the pull on the side of the handle attached to the fixed jaw of the wrench.

FIGURE 40 Adjustable wrench

Crowfoot Wrench: It is normally used when accessing nuts that must be removed from studs and cannot be accessed using other related tools.

FIGURE 41 Crowfoot wrench

Flare Nut Wrench: It looks similar to a box-end wrench that has been cut open on one end, allows the wrench to be used on the B-nut of a hydraulic line.

FIGURE 42 Flarenut wrench

Files

Files are used for the removal of metal to an accuracy of plus-minus 0.025mm. They are used to square ends, file holes, file rounded corners, remove burrs from metal, straighten uneven edges and smooth rough edges.

The main component is made of high carbon steel with a handle usually made from wood. Files are manufactured in a variety of shapes and sizes. The cuts of files must be considered when selecting them for different tasks.

Hand files are parallel in width and tapered in thickness. The smooth edge permits filing in corner. The parts of a hand file are shown in the figure below.

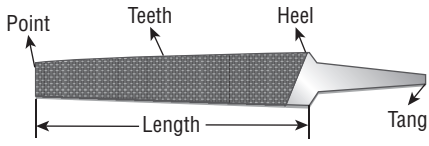

FIGURE 43 Parts of a hand file

They are classified based on the main features such as length, section, cut and grade as given below.

Length: Measured from the tip to the heel of the file excluding the tang.

Cut: Type and relative coarseness of the teeth.

Single cut file: It has a single row of teeth extending across the face at an angle of 65° to 85° with the file length. The cuts are parallel to each other and its size depends on the coarseness of the file.

FIGURE 44 Single cut file

Double cut file: It has two rows of teeth that cross each other. The first row and the second row are referred as *overcut* and *upcut*, respectively. The first row angle is 40° to 45° with the file length. The cuts are parallel to each other and its size depends on the coarseness of the file. The upcut is finer and shallow when compared to the overcut. The teeth of these files tend to clog more easily than single cut files.

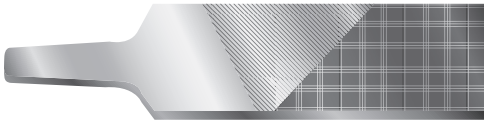

FIGURE 45 Double cut file

Dreadnought or Vixen file: It has a single row with its teeth curved in an arc and is suitable for heavy cutting soft metals. It has curved teeth that cut aggressively for rapid filing and smooth finishing of soft metals and wood.

The regular cut and fine cut vixen files are used for tough work on steel, cast iron, copper, brass, aluminum and other hard metals. The smooth cut is used where a superior finish is required by removing very slight amount of material.

FIGURE 46 Dreadnought or Vixen file

Rasp file: In this, each tooth is cut separately by a single pointed tool. These files are used for coarse work on soft materials.

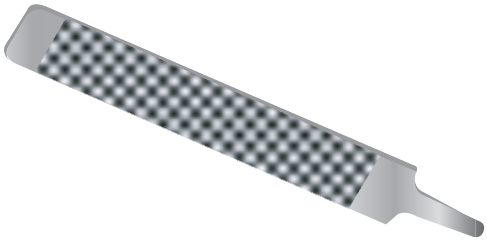

FIGURE 47 Rasp file

Section: Cross-section of the file.

Flat file: It is a double cut file that is slightly tapered towards the point in width and thickness. Usually one edge is left without teeth to permit working against a finished surface. Flat files are double cut on both sides and single cut on both edges.

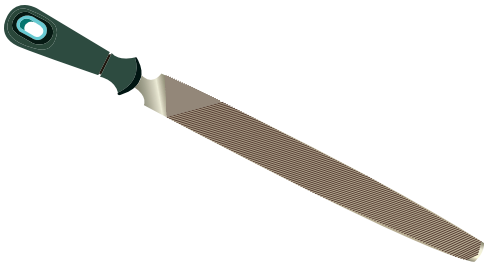

FIGURE 48 Flat file

Half Round file: It is usually double cut type on both sides and tapers towards the tip. One surface is flat and the other is curved. It is a general purpose file, which can also be used for filing concave surfaces. The shape of the tool allows it to be used where other files are unsatisfactory.

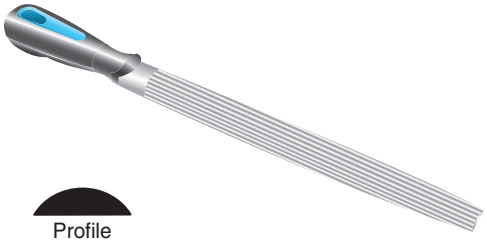

FIGURE 49 Half round file

Square file: This file tapers for part of its length and is double cut. These files are used mainly for slotting, grooving and finishing square edges.

FIGURE 50 Square file

Triangular or Three square file: It has a triangular cross section with its three sides each at 60° to the others and tapers towards the tip. These

files are used for filing the gullet between saw teeth, filing internal angles and clearing out corners.

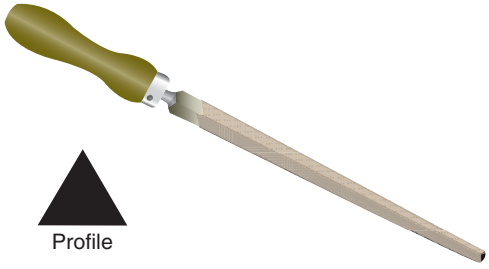

FIGURE 51 Triangular or three square file

Round or Rat tail file: Its cross section is circular and may either be tapered or blunt. These are mainly used for filing out concave surfaces and holes.

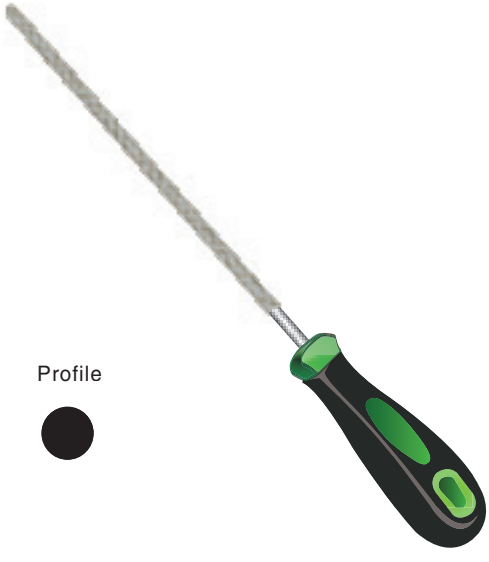

FIGURE 52 Round or rat tail file

Grade: Depth and spacing of the teeth.

Bastard file: It is a coarse grade file used for roughing out, as it removes metal quickly.

Second cut file: It is the finer graded type which gives a better finish. But the cutting process takes time.

Smooth file: It has shallow teeth that are closely set enabling a good finish. These grade files should be used for finishing work only.

Dead Smooth file: It is the smoothest grade of all files.
The following are the other commonly used files in aviation industry.

Mill file: It is tapered slightly in thickness and in width for about one-third of their length. These files are mainly used for draw filing.

FIGURE 53 Mill file

Lead float file: It is a single cut type file specifically designed for use on soft metals. These files are cut more coarsely to deal with the softest metals and are available in various lengths.

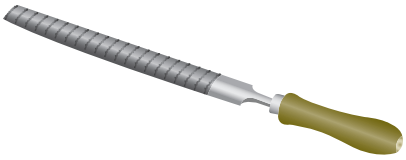

FIGURE 54 Lead float file

Warding file: It has a rectangular cross section that tapers to a narrow point in width. This file is used for filling in narrow spaces.

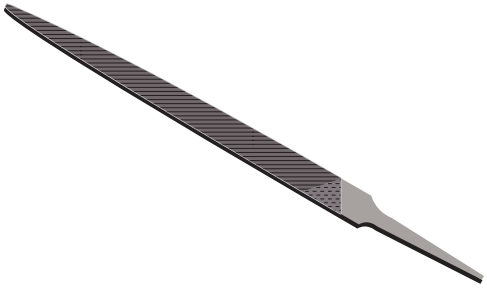

FIGURE 55 Warding file

Knife file: It resembles a knife due to its narrower blade type. These files can create V-shaped grooves and are used by toolmakers on work having acute angles.

FIGURE 56 Knife file

The following are the recommended filing methods.

Cross filing: This method is used for squaring and roughing down. It is done by holding the file at both ends and using the files at right angles to the work. While starting the process, grasp the handle so that its end fits into and against the fleshy part of the palm with the thumb lying along the top of the handle in a lengthwise direction. The file end must be grasped between the thumb and first two fingers. During the return stroke, relieve the pressure in order to prevent unnecessary wear of the file.

Draw filing: Once the cross filing has been completed, this methods is used for finishing tasks. It is done by holding the file in line with the work to produce a shearing effect. During the return stroke, pressure should be relieved.

Rounding corners: This method is used for filing round surfaces. If the surface is narrow, start the forward stroke of the file with the point of the file inclined downward at 45° angle and finish the stroke with the heel near the curved surface. By following this method, the full length of the file can be utilized.

Removing slivered edges: This method is used to remove burred edges that prevent parts from fitting properly, thus also avoid injuries caused due to scratching and marring of parts.

The following are the precautions that must be monitored when using files.

Always use the type, length and grade of file suitable for the job.

New files must not be used on steel for the first time. Using them on brass or similar metals will harden them.

Never use a file without a handle.

Make sure the file teeth are cleaned using a scratch card or wire brush. A sharp ice pick can be used to remove clogging.

Secure the work rigidly so that the position enables filing to be done horizontally.

Try to use the full length of the file for each stroke.

As the file only cuts on the forward stroke, relieve the pressure during the backstroke.

Rubbing chalk on the teeth during the final finish produce excellent results.

Do not strike the files on hard material as they are brittle.

Store the files in separate racks to prevent dulling of teeth caused by bearing against each other.

Always store them in a dry place to prevent rusting.

Hacksaws

Hacksaws are used to cut metals and hard materials. They usually consist of a frame, blade and a handle.

Frame: It is made of mild steel and its length may be fixed or adjustable depending upon the blade length.

Blade: It is mounted on two pins located at the end of each frame. High carbon steel blades are flexible and high speed tungsten blades are shape but fragile. Blades are classified based on their length, material and pitch (number of teeth per inch). The number of teeth per inch varies from 14 to 32. The more the teeth number, the finer the blade. The blade lengths are available from 6 – 16 inches. Soft metals require coarse pitch blades and vice versa. The flexible blades are usually best for sawing hollow shapes and metals having a thin cross section.

Handle: The two handles are pistol grip and straight. When installing a blade in a frame, the blade has to be mounted away from the handle with the teeth pointing forward.

The types of commonly used hacksaws are discussed below.

Junior Hacksaw: It has a small flexible blade and is used to carry out simple tasks. The blade pitch is usually 32 in this type of hacksaws. Tension is applied by the elasticity of the frame.

FIGURE 57 Junior hacksaw

Piercing Saw: It has a very fine blade and is used for cutting intricate shapes in sheet metal.

FIGURE 58 Piercing saw

Coping Saw: It uses a 14tpi coarse blade that can be swiveled to any angle. These saws are used for cutting shapes in soft materials.

FIGURE 59 Coping saw

The following are the precautions that have to be taken when using hacksaws.

Select an appropriate blade for the task.

Select the correct blade length with the correct pitch.

The blade has to be assembled in the frame so that the teeth points away from the handle.

Correctly adjust the tension of the blade in the frame in order to prevent the saw from buckling and drifting.

Make sure that the work is clamped securely in the vice.

Mark the starting point by nicking the surface that will aid in starting the saw at the right place.

Hold the saw at an angle that will keep at least two teeth in contact with the work at all times.

Use long steady strokes using the whole length of the blade releasing the pressure on the back stroke.

After completing the cut, remove chips from the blade, loosen tension on the blade and return the hacksaw to its proper place.

Vices

A vice is a tool used to hold objects securely to allow work to be performed on it.

The types of commonly used vices are discussed below.

Hand Vice: Its body is made from steel with the jaws hardened and tempered. The spring will keep the jaws apart with the wing nut, thus providing the clamping action. These vices are used for holding objects when drilling, riveting and similar works.

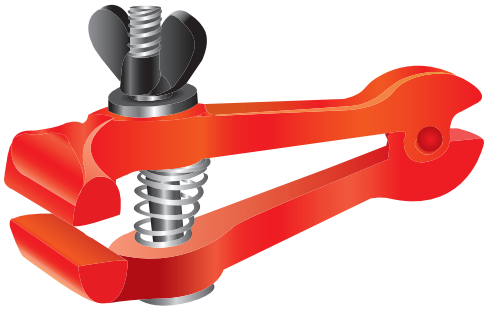

FIGURE 60 Hand vice

Bench Vice: It provides rigid support for work at the bench. It allows both hands to be used when sawing, filing bending and various other tasks. The two components of the bench vice are:

The main body: Contains a fixed nut or a half not, which is bolted to the workbench.

The sliding part: It fits into the main body and is moved back and forth by means of a screw thread. The jaws close by turning the screw thread in a clockwise direction with help of a tommy bar, whereas the jaws open when turned in an anticlockwise direction. With a quick release mechanism that is present in some vices, a half nut is used and operation of a live disengages it from the screw thread. A clam made from copper or aluminium is fitted in order to protect the objects with smooth surfaces and hardwood 'V' blocks are used to protect tubing.

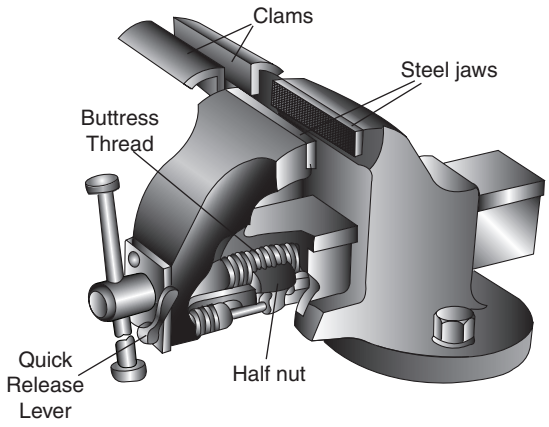

FIGURE 61 Bench vice

Machine Vice: It is used to hold the work the machine pieces when drilling and shaping them. All machine vices give a parallel grip. The base of this vice is slotted so that it can be bolted down to hold the work steadily. This vice can be held by hand for light drilling works. The sliding jaw is moved by a screw thread, which is turned either by a knurled handle or a cranked handle. There is no quick release mechanism fitted to this type of vice.

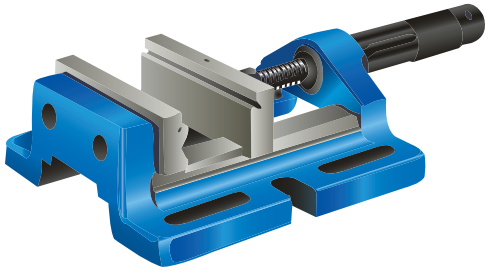

FIGURE 62 Machine vice

Toolmakers Clamp: It is made of case-hardened mild steel and is used for holding small pieces of work together for riveting and assembling. A clip screwed to the top jaw locates screw A, thus preventing the jaws falling together when being adjusted. This type of clamp gives a parallel grip in all positions and are classified based on the length of the jaws. The jaws are adjusted to the approximate correct position and the final tightening is done by first adjusting screw A and then screw B.

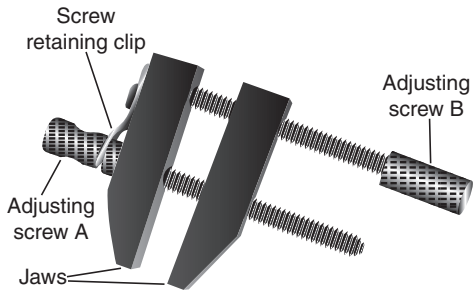

FIGURE 63 Toolmakers clamp

The following are the precautions and maintenance instructions that has to be followed when using vices.

Ensure the vice is clean.

Keep the screw thread slightly lubricated.

Mount the vice in such a way that the top of the vice is leveled with the worker's elbow when in working position.

Ensure the vice securing bolts are tight.

Never use the vice as an anvil for hammering purposes.

While using a machine vice for drilling on, care must be taken not to drill into the base of the vice. To prevent such damages, a piece of wood can be placed under the work to be drilled.

Always clean the vice after every use.

Drills and Drill Bits

The following are the commonly used portable drills these days.

Traditional Hand Drill: This portable drill is also known as *egg-beater drill*. It can only handle holes up to ¼" in diameter.

FIGURE 64 Traditional hand drill or Egg beater drill

Breast Drill: In this, the breastplate is attached at the upper end of the drill in order to permit the use of body weight to increase the cutting power. These drills are used to drill small holes horizontally.

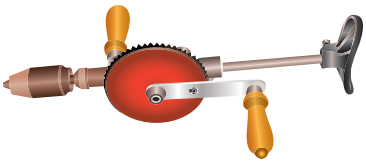

FIGURE 65 Breast drill

Pneumatic Power Drill or Air Drill: It is driven by compressed air stored in small cylinders. They are safer to run and are preferably used around places with flammable materials.

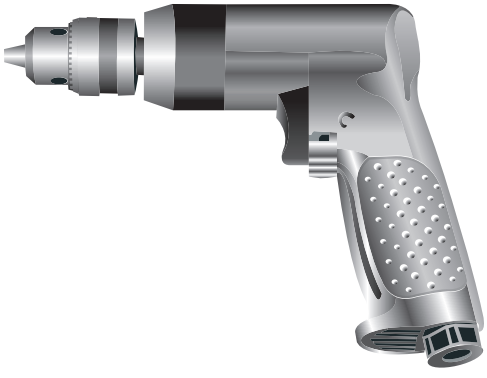

FIGURE 66 Pneumatic power drill or Air drill

Drill bits are usually made from high carbon steel and are used for drilling holes. They are available in various forms to meet different requirements. High speed or alloy drills contain 14% tungsten and can be used at higher cutting rates. Thus these drills can also withstand high temperature. The following are the main types of drill bits in use.

Twist Drill Bit: It is a cylindrical tool that is rotated to cut and enlarge holes in materials. These are the most common types of drill bit in which the shank provides the drive. It has spiral flutes running the length of the body and a conical point with cutting edges. The flute clears out the swarf and paves way to allow coolant.

To provide extra strength, the web of the drill increases in thickness from the tip to the shank. The diameter of a twist drill can be expressed in fractions, letters or numbers. On large drills, the web may be thinned by local grinding to reduce the size of the non-cutting edge. The cutting angle is 59° from the centre line with the edges being of equal angle and

length. It may be altered to suit specific drilling operations. Normally, the angle between the web and the cutting edge is 130° and the clearance angle is 12°.

FIGURE 67 Twist drill bit

There are various convenient twist drill grinders available to sharpen twist drills. Instead, the following steps can be carried out for sharpening drills.

Adjust the grind tool rest to a convenient position.

Hold the drill between the thumb and index finger of right/left hand and grasp the body of the drill near the shank with the other hand.

Place the hand on the tool rest with the centerline of the drill making 59° angle with the cutting face of the grinding wheel.

Slightly lower the shank end of the drill.

Slowly place the cutting edge of the drill against the grinding wheel and twist the drill in a clockwise direction.

Maintain the same pressure against the grinding surface until the heel of the drill is reached.

Check the results of grinding with a gauge to ensure the lips are of same length and at 59° angle.

Flat Drill Bit: It is used to finish the bottom of a blind hole.

FIGURE 68 Flat drill bit

The cutting speed depends on drill size, type and the material being drilled. The larger the drill or the harder the material, the slower the rpm. Most drill bits are placed in a self-centering chuck on the drilling machine. A *Morse Taper* is present to provide stronger grip that is required with

larger drills. It engages directly with the tapered adapter of the machine. A slot is provided in the adapter to remove the drill by inserting a wedge on top of the drill tang and tapping the wedge with a hammer in order to free the drill.

FIGURE 69 Morse taper

Lubricating the drill prevents excessive heat by reducing friction and helps preserves the temper of the machine. Cutting oil, soapy water, turpentine and paraffin are the lubricants used depending on the type of material.

Chisels

A chisel is a hard steel cutting tool made from high carbon or nickel alloy steel with a soft chamfered head to prevent cracking under repeated hammer blows. It is used for shearing rivets, cutting and chipping any metal softer than the chisel itself. The nature of the task governs the size and shape whereas the material type governs the cutting angle. The cutting angle should be 60° to 70° for cutting wire, strapping iron and other general purposes.

The following are the types of chisels.

Flat Chisel: It is used for general chipping work such as parting metal sheets. The size of a flat chisel is determined by the width of the cutting edge.

FIGURE 70 Flat chisel

Crosscut/Cape Chisel: It resembles a flat chisel but with a narrow cutting. It has the same cutting angle and is used for cutting grooves in a flat surface.

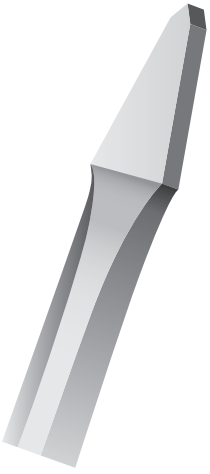

FIGURE 71 Crosscut/Cape chisel

Diamond Point Chisel: It has a tapered square at the cutting end which is then ground at an angle to provide the sharp diamond point. It is used for cutting out corners and rectifying incorrect drill starts.

FIGURE 72 Diamond point chisel

Half Round Chisel: It is used for cutting half round bottomed grooves and also used for rectifying incorrect drill starts.

FIGURE 73 Half round chisel

Round Nose Chisel: It is used to re-center a drill that has moved away from its intended center.

FIGURE 74 Round nose chisel

The following are the precautions and maintenance instructions that has to be followed when using chisels.

Select the chisels based on the nature of the task and the material to be cut.

During grinding, the cutting edge must be kept cool by frequently dipping in water.

The end of the chisel should be kept free from ragged ends and burrs.

Scrapers

It has a sharp cutting edge which is obtained by grinding and sharpening processes on stones. They are used mostly on steel to produce a very precise finish on its surface that has been finished.

The following is the procedure of using scrapers.

Use a surface plate and a blue marking ink (Engineers Blue) to produce a flat surface.

Clean the surface place and smear a thin layer of ink on it.

Place the work on the surface plate and move back and forth.

Remove the work and colour the high spots.

Remove the high spots using a scraper and rub the work on the surface plate again.

Repeat the above steps until the work is as flat as possible.

Protect the cutting edges by properly storing them.

The following are the types of scrapers.

Flat Blade Scraper: It has a straight flat blade with a sharpened tip and is used to produce accurate flat surfaces. The tip is often slightly convex to help prevent the corners of the scraping surface causing burrs.

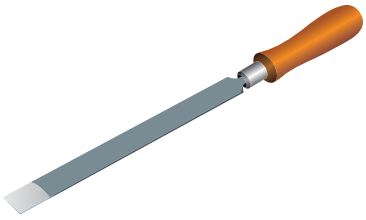

FIGURE 75 Flat blade scraper

Triangular Blade or Three Corner Scraper: It has a long triangular blade that tapers to a point at the end and also has three scraping edges. They are commonly used to scrape awkward corners and the edges of flat surfaces and to remove burrs from the small bearings.

FIGURE 76 Triangular blade scraper

Curved Blade, Half Round or Bearing Scraper: It is used for scraping curved surfaces such as the inside of bearings and the other curved surfaces.

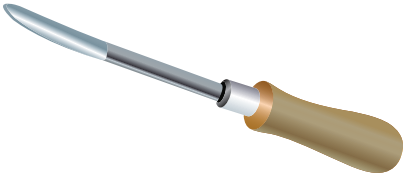

FIGURE 77 Curved blade scraper

Reamers

Reamers have flutes that provide a series of cutting edges and are used to give smoothly finished drilled holes to accurate dimensions. The shanks in hand reamers have square ends and can be turned with a tap wrench. Even though the high-speed reamers usually last much longer than the carbon steel type, their cutting blades lose their original keenness sooner than the carbon steel reamers.

The following are the types of reamers.

Parallel Reamer: It can only cut to one size and may have straight or spiral flutes. The straight fluted reamer is less expensive than the spiral fluted reamer. The amounts of metal that can be removed by these reamers depend on their size and the type of material being used. The larger the holes, larger the amount of metal be removed. Roughly, the amount that can be removed from 13mm diameter hole by a parallel reamer is about 0.127mm. Both types are tapered for a short distance back of the end to aid in starting.

FIGURE 78 Spiral fluted parallel reamer

FIGURE 79 Straight fluted parallel reamer

Expansion Reamer: This precision tool is generally used for reaming abrasive material. These reamers are built with slot cut between the flutes and a tapered screw in the head. As the reamer is used, turn the screw to expand and re-clear the reamer as it sharpens back to its original size. These reamers can be reused multiple times. This type is available in standard size from ¼ inch to 1 inch, increasing in diameter by 1/32 inch increments.

FIGURE 80 Expansion reamer

Adjustable Reamer: In this reamer, separate moveable blades are inserted in the grooves provided in the body of the reamer.

FIGURE 81 Adjustable reamer

Shell Reamer: It is a hollow fixed size type of reamer, which is used to ream long or deep holes such as gun barrels. It is also used on close fitting mandrels or boring bars, which pass through the hollow centre.

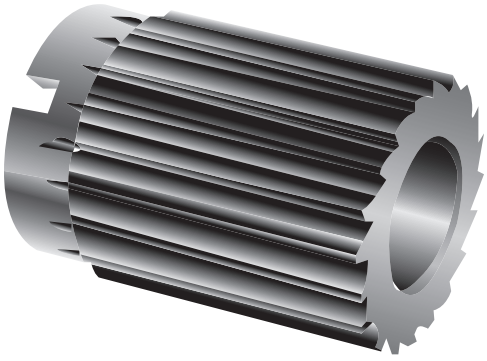

FIGURE 82 Shell reamer

Taper Reamer: It is used to prepare holes for taper pins. These reamers are available in sets numbered from 0 to 10 but the taper remains standard.

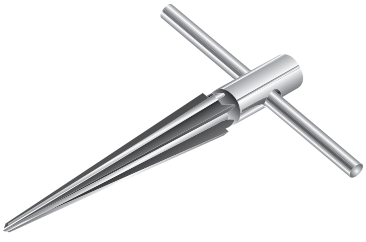

FIGURE 83 Taper reamer

Piloted Reamer: This user-friendly reamer ensures that it cuts centrally in the hole. The tapered end makes the reamer cut progressively ensuring a neat hole at the entry point.

FIGURE 84 Piloted reamer

Chucking Reamer: It has shorter flutes and is used for rough cuts. They are also known as *machine reamers* or *rose reamers* or *fluted reamers*.

FIGURE 85 Chucking reamer

The following are the precautions and maintenance instructions that has to be followed when using reamers.

Handle reamer blades with care to avoid chipping them.

Reamer blades are hardened to the point of being brittle.

Ensure the reamer enters square in the hole.

Turn the reamer only in clockwise direction whilst cutting and removing.

Turn the reamer steadily and evenly to prevent scoring of the hole walls.

Select a drill 0.003 to 0.007 inch smaller than the reamer.

Always hand ream using the correct wrench.

Taps

Taps are manufactured from high carbon or alloy steel and are fluted to provide cutting edges. They are used to cut threads on the inside of a hole. Markings on the shank includes type of thread, size and the number of tip. Hand taps are usually available in sets of three for each diameter and thread series. They are usually identical in diameter and cross section with the difference only in the amount of taper.

The following are the types of taps:

Taper Tap: It is used to begin the tapping process, because it is tapered from the tip to the sixth thread. The tip diameter is equal to the root diameter of the threads. This tap cuts the full thread in a through hole.

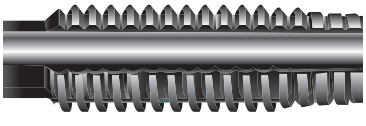

FIGURE 86 Taper tap

Plug Tap: It has a chamfer length of 3-5 threads and is used when one end of the hole is closed but a full thread is not required all the way to the bottom of the hole.

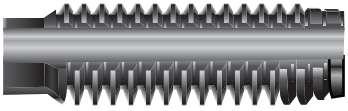

FIGURE 87 Plug tap

Bottoming Tap: It is not tapered and is used to cut full threads to the bottom of a blind hole (A hole that does not go completely through the metal).

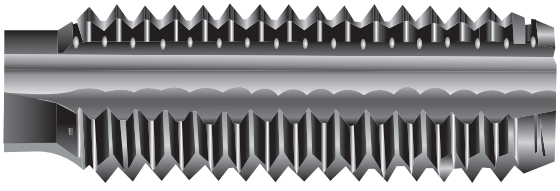

FIGURE 88 Bottoming tap

The following is the procedure for cutting internal threads.

Drill a hole that is slightly larger to prevent the tap from binding and breaking. This hole should be the core diameter of the thread.

Choose a suitable drill for the task by referring to an Engineer's pocket book or by measuring the core diameter and taking the nearest drill which is slightly larger than the core diameter or by selecting a drill which can pass through a nut of the correct size or based on the drill size that is specified on the shank of the tap.

Enter the tap into the hole perpendicular to the face.

Make sure the tap sits in the hole square by using a square.

Continue turning in the cutting direction for half a turn and then reverse the direction for a quarter turn, until the tap protrudes from the other side of the hole. This process will break the cutting chips thus preventing tap strain.

Change to the plug tap as required and continue until the thread has been properly cut.

Lubricate the work using lubricants such as cutting oil, soapy water, turpentine or paraffin.

It is important to follow proper procedure, as poor engineering practices such as using an incorrect tap size, smaller hole, forcing a tap too far down the blind hole, turning tap clockwise throughout and lack of lubrication.

Dies

It is used for cutting external threads on round stock. An adjustable round split die has an adjusting screw that can be tightened so that the die is spread slightly. The diameter and fit of the thread can be controlled by adjusting the die. In the plain round split die, a variety of thread fits are not available as these types of dies are not adjustable.

The following are the two main types of dies.

Circular Die: This is generally used for cutting smaller threads and slight adjustment can be affected by the screws in the side of the stock. The die thread is tapered to make an easier start. When fitting the die to the stock, the tapered side must always be away from the shoulder of the stock.

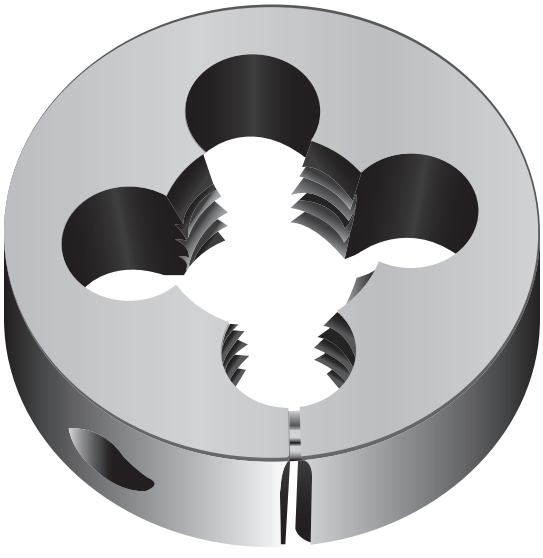

FIGURE 89 Circular die

Rectangular Die: It is an adjustable two-piece die, which is used for cutting larger diameter threads. The die has tapered threads to allow an

easier start. The engraved numbers on the two halves must be fitted on the same side.

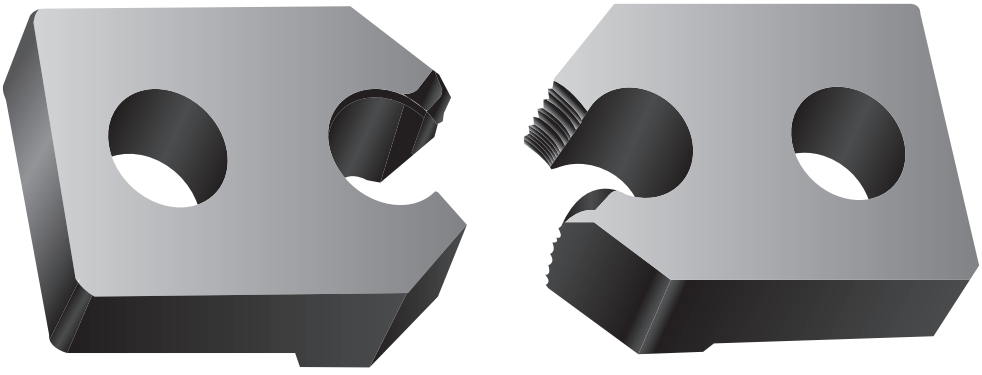

FIGURE 90 Rectangular die

Die nuts are turned using a spanner and are used to clean a damaged thread.

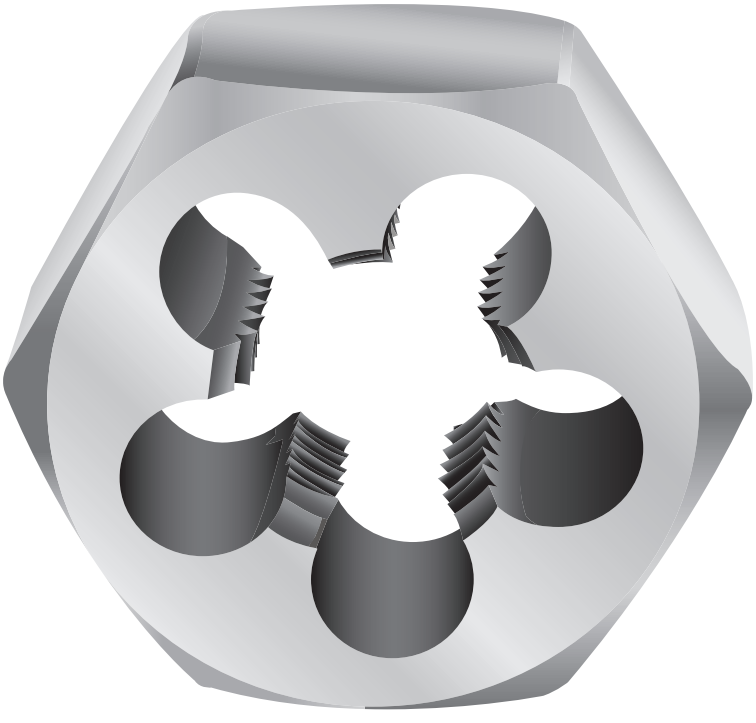

FIGURE 91 Die nuts

The following is the procedure for cutting external threads.

Secure the work in the vice.

Taper the rod end slightly to support the start. The external diameter of the round rod must be equal to the crest diameter of the thread to be cut.

Place the correct die in the stock and relax the two outer screws.

Tighten the centre screw and re-tighten the outer screws.

Place the stock and die squarely on the rod and start the cutting process by following the same procedure as for taps.

If additional cutting is required, slightly loosen the centre screw of the stock, tighten the two outer screws and re-tighten the centre screw.

Repeat the process until the nut is a good fit.

Once done, try a new nut on the new thread.

Rules

Rules may be either rigid or flexible and are used as a measuring tool or as a straight edge. It is important to be careful when using measuring devices. These precision tools are accurately marked with very delicate components. The inch is a measuring unit used in aircraft industry, which may be divided into smaller parts by either common or decimal fraction divisions.

The following are the two main types of rules.

The Steel Rule: This is a rigid type rule that is made from high carbon steel hardened and tempered. It is usually graduated in imperial and metric units. After use, clean and lightly oil to keep it free from rust.

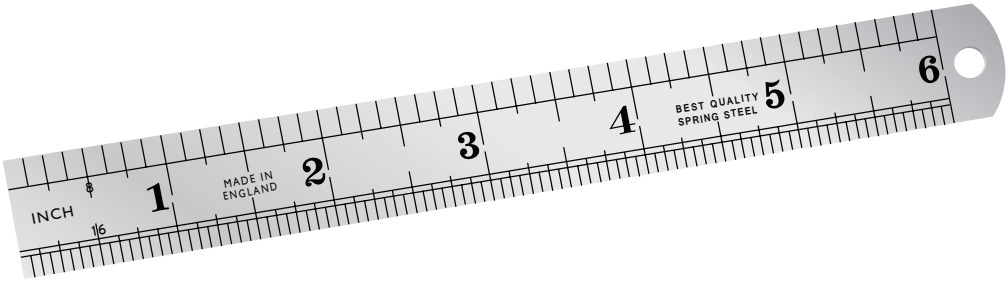

FIGURE 92 Steel rule

Tape Measure: This is a flexible type rule that is made of linen or flexible steel. It is available in various lengths marked with imperial and metric scales. Stretching the tape will affect the indicated measurement.

FIGURE 93 Tape measure

Scribers

Scribers are used for marking lines on the surfaces of work like a pen/pencil. They are made of high carbon steel and its length is usually 4-12 inches. It has two pointed ends with one end bent at an angle of 90°.

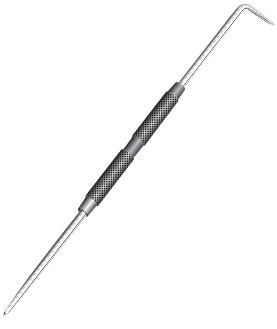

FIGURE 94 Scriber

The following are the points to be noted when using scribers.

Check the points for sharpness before using a scriber.

Ensure the straightedge is positioned flat on the metal.

Hold the scriber like a pencil and slightly tilt it in the direction toward which it will be moved.

Keep the point close to the guiding edge of the straightedge.

The scribed line should be visible but not deeper than required.

As scribers can crack aluminium and its alloys at a scriber mark due to stress, they are not to be used on notch sensitive metals.

Dividers and Pencil Compasses

Dividers and pencil compasses are used to transfer measurements from the rule to the work and to scribe arcs and circles. They both have two legs joined at the top by a pivot. Dividers have both legs tapered to needle points whereas pencil compasses have one leg tapered to needle points. Dividers are more accurate and should be used to transfer critical measurements. In metals, the dividers are used only to scribe arcs/circles that will be removed later by cutting. All other arcs/circles are drawn with pencil compasses to avoid scratching the material.

FIGURE 95 Divider

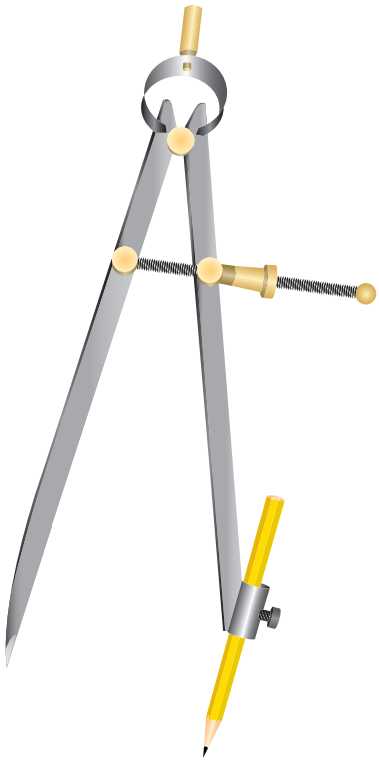

FIGURE 96 Pencil compass

The following are the steps and precautions to be followed when using dividers and pencil compasses.

Ensure the points are sharp and should be protected by sticking them into a cork.

Hold the divider/compass with the point of one leg in the graduations on the rule.

Turn the adjustment nut with the thumb and forefinger and adjust the divider/compass until the point of the other leg rests on the graduation that gives the requirement measurement.

To draw an arc/circle, hold the thumb attachment on the top with the thumb and forefinger. Swing the compass in a clockwise direction and draw the desired arc/circle, with pressure exerted on both legs.

Trammels

Trammels consist of adjustable trammel points attached to a bar and can be used to scribe large circles. These trammel points can be adjusted for

height and position. The distance between the points determines the size of the arc/circle to be drawn.

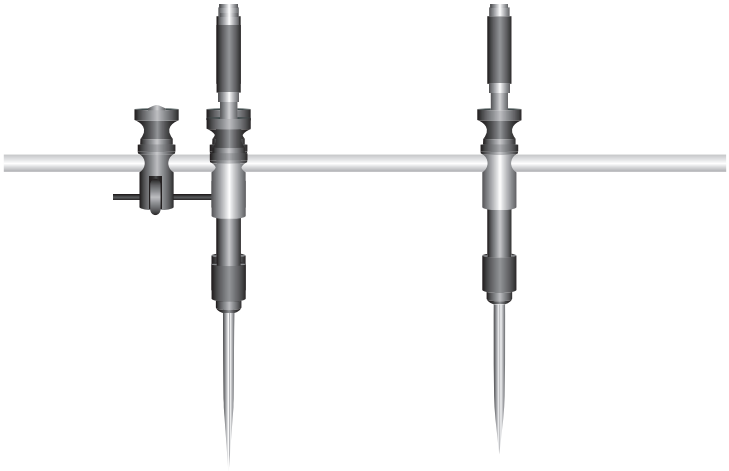

FIGURE 97 Trammel

The Combination Set

The combination set is a set with three tools and has several uses. It consists of a blade which is graduated in inch and metric scales. The head slides along the blade and can be fitted at any desire place. The central groove accommodates the clamping screw fitted to each head. The head slides in a central groove on the blade can be used as a rule separately.

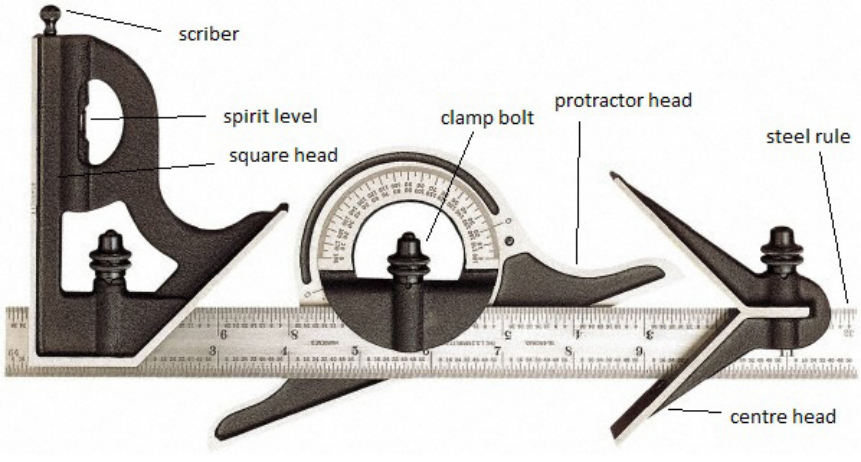

FIGURE 98 The combination set

The following are the three heads that are made of close grained cast iron.

The Square Head: It is provided with two working faces at 90° and 45° to the blade thus enabling it to be used as a square and as a mitre. The spirit level in the stock head makes it convenient to square a piece of material with a surface and indicates level at the same time.

The Centre Head: It is used in conjunction with the blade to locate the centre of shafts or other cylindrical work.

The Protractor Head: It is used to check or set any angles up to 180°. The spirit level is often incorporated with 1° accuracy.

Calipers

Calipers are used for measuring distances and for comparing measurements. The calipers are set close to size by hand and to the correct size by tapping one leg against the rigid object.
The following are the three types of calipers.

Inside Calipers: It has outward curved legs and is used for measuring inside diameters such as hole diameters, width of slots and so on.

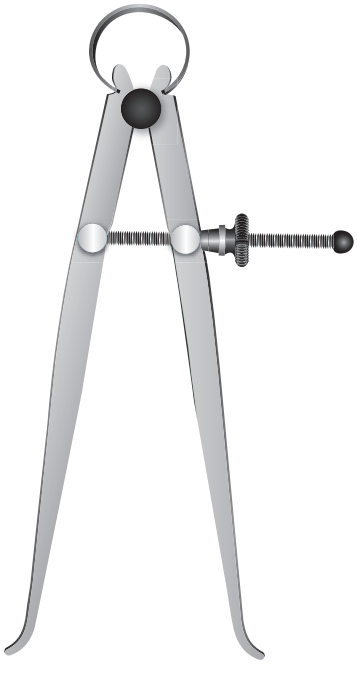

FIGURE 99 Inside calipers

Outside Calipers: It has inward curved legs and is used for measuring outside dimensions such as the diameter of a piece of round stock.

FIGURE 100 Outside calipers

Odd Leg or Jenny or Hermaphrodite Calipers: It is used as a marking gauge in layout work for finding the centre of a round bar and for scribing lines parallel to an edge.

FIGURE 101 Odd leg calipers

The Fitter's Squares

The fitter's squares are made of high carbon steel and are used for checking the squareness and for marking off lines at right angles to an edge. To check for accuracy, it can be checked against a master square and scribe a line down using the blade as the guide. Any error will show up as twice the actual error by reversing the square on the master square.

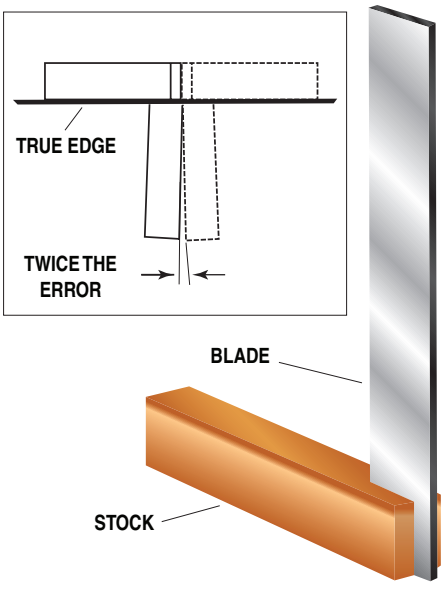

THE FITTER'S SQUARE

FIGURE 102 Fitter's square

Just like any other hand tool, these squares should also be kept clean, lightly oiled and stored in a proper place.

Surface Plates

The surface plates are made of accurately machined cast iron with a hand finished perfect flat surface. Their bottom sides are beamed to prevent twisting of the top face. The flat surface is used as the main horizontal reference plane for inspecting accuracy, for layout and for setting up the tool.

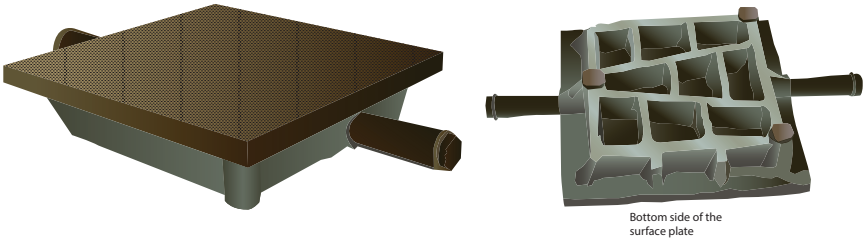

FIGURE 103 Surface plate

Marking-off Tables

These free standing tables are made of close-grained cast iron and are strongly ribbed at the bottom side for rigidity. They are used to form a base for support work for marking-out. Only measurement work should be done on the table in order to preserve the surface.

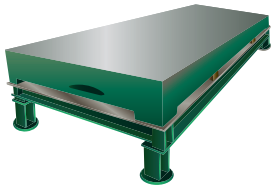

FIGURE 104 Marking-off table

Vee Blocks

Vee blocks are supplied in matching pairs with their identification number being the same. It has a 90° channel rotated 45° from the sides. The small groove at the bottom comes with screw clamps to hold the work. They are used on the surface plate or marking-off table to hold round metal rods.

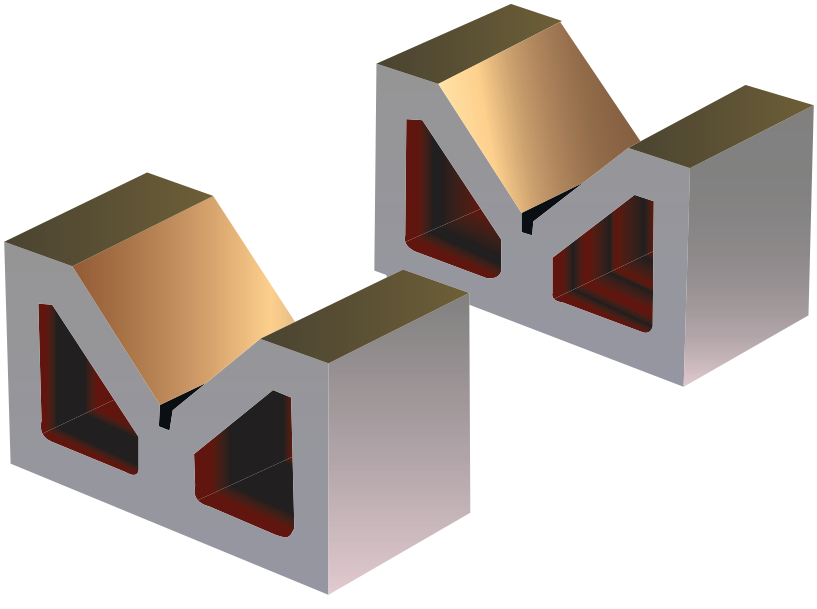

FIGURE 105 Vee block

Scribing Blocks

The scribing blocks consist of a scriber mounted on an adjustable stand. The pillar angle and the height can be adjusted. The dowels act as guides against the edge of the marking-off table so that the lines can be scribed parallel to the edges. The scribing blocks are used to mark out lines parallel to a true surface and to test the accuracy of plane surfaces.

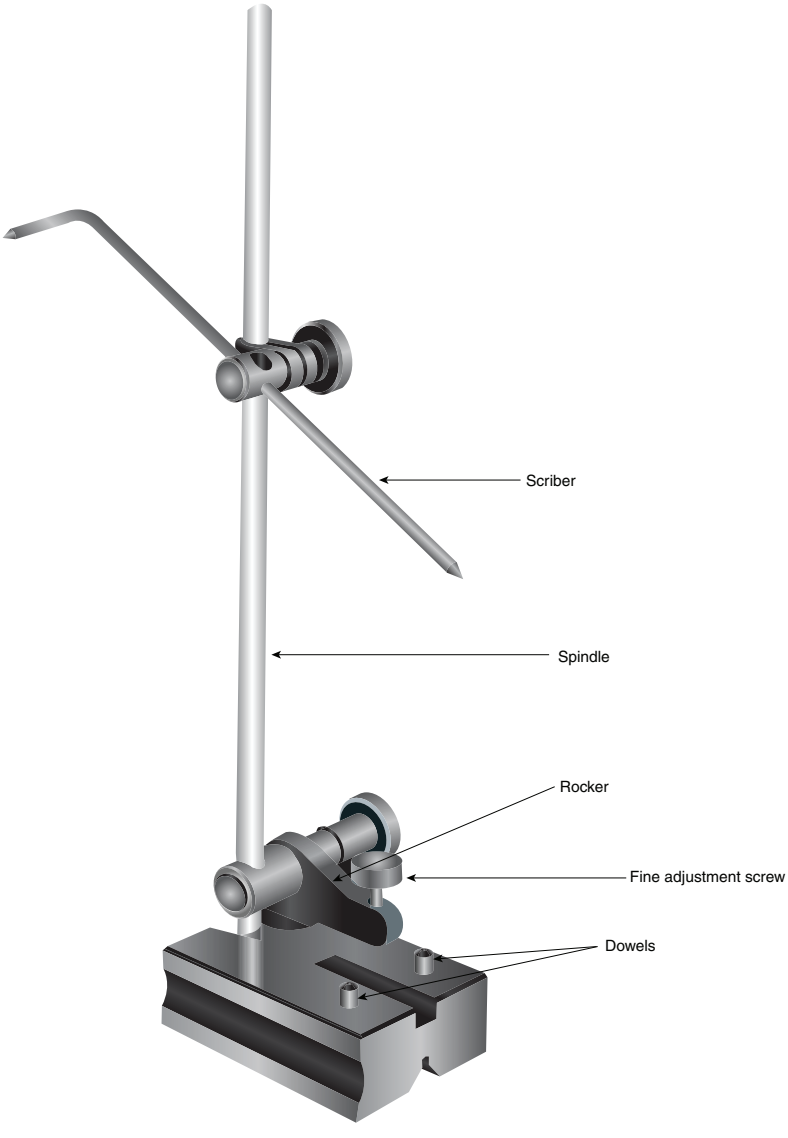

FIGURE 106 Scribing block

Key Seat Rule

The key seat rule is used for marking off lines parallel to the axis on the surface of tubes and round bars. They are usually classified based on their length and also referred as box squares.

FIGURE 107 Key seat rule

Countersinks

Countersinks are used to cut a cone shaped depression around the hole in order to allow a rivet or screw to set flush with the surface of the material. They are available in various angles depending on the countersunk rivets and screw heads. The cutters are interchangeable in some special stop countersinks so that holes of various countersunk angles may be made. Do not remove an excessive amount of material when using a countersink, as it reduces the strength of flush joints.

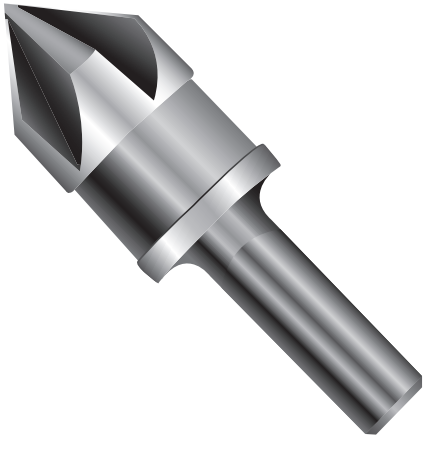

FIGURE 108 Countersink

Machine Tools

The Lathe

It is a machine tool that rotates the work piece on its axis to perform various operations such as drilling, turning, facing and thread cutting. It can be used on wood, metals, composites and various other materials.

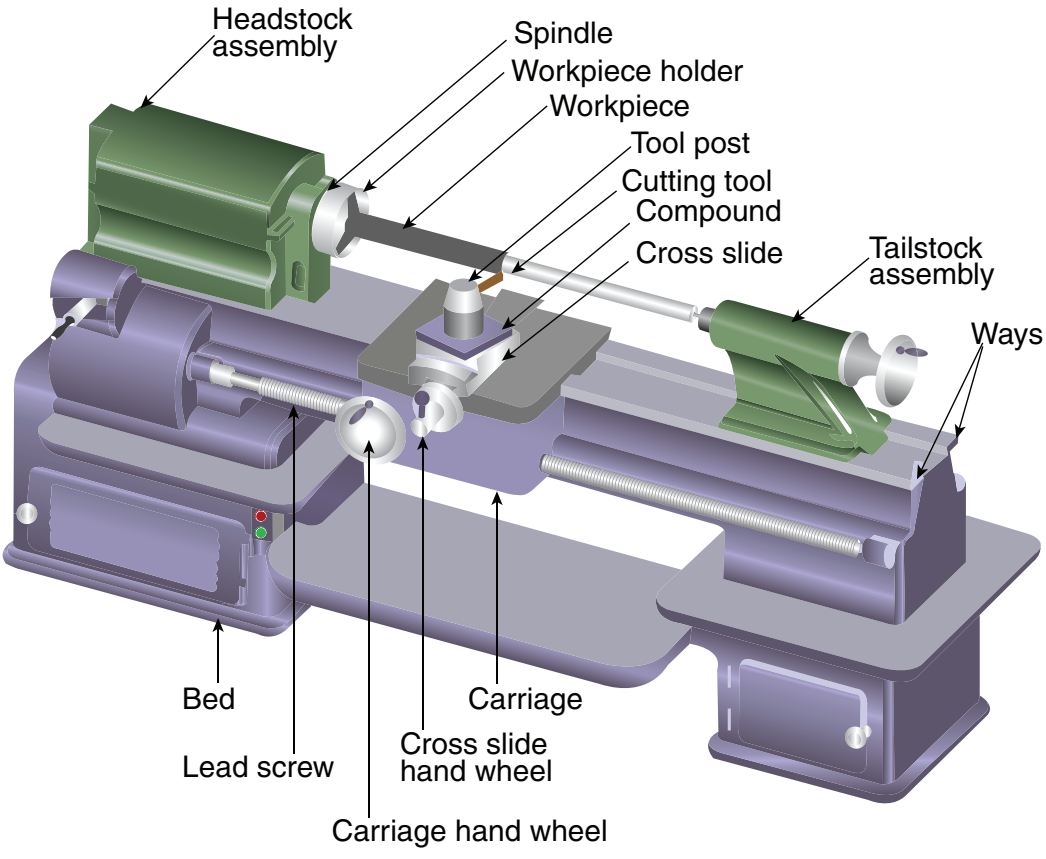

FIGURE 109 Lathe

The Pillar Drill or Drilling Machine

It is used to drill holes in a variety of materials. They machines are available with different drilling speeds. It can be either by the use of a selector lever or by changing the belt from the electric motor to the drilling pillar.

The part to be drilled should be firmly riveted in a clamp with the guard in proper place.

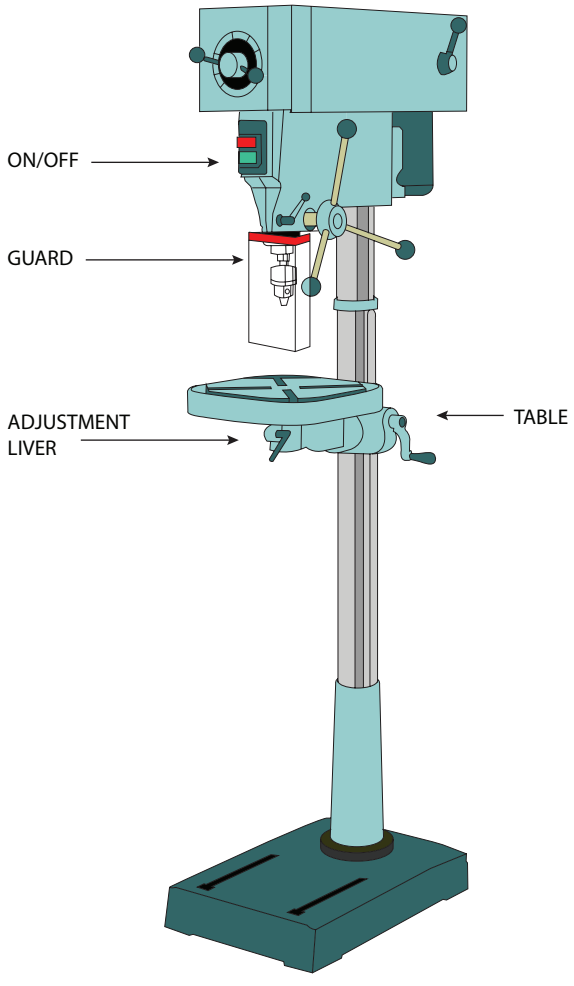

FIGURE 110 Drilling machine

Milling Machine

A milling machine may be horizontal or vertical. A horizontal miller is used for milling down metal to a close tolerance and good surface finish.

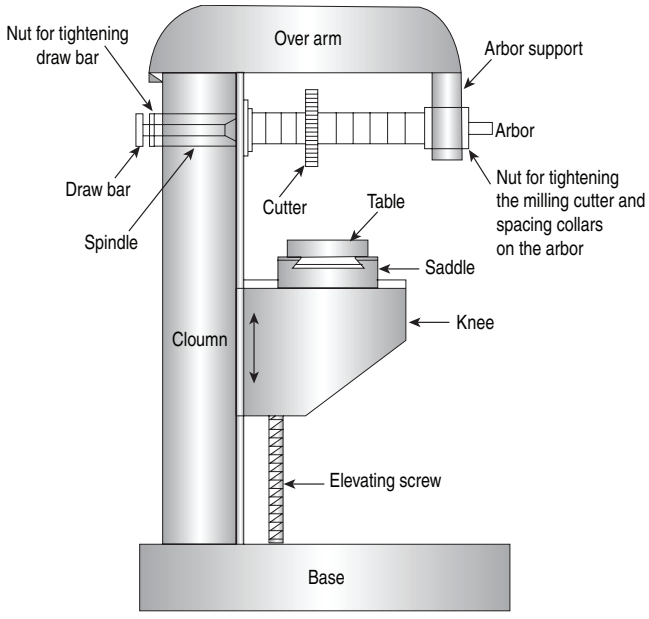

FIGURE 111 Horizontal miller

A vertical miller is used for shaping materials such as mild steel, aluminium and nylon.

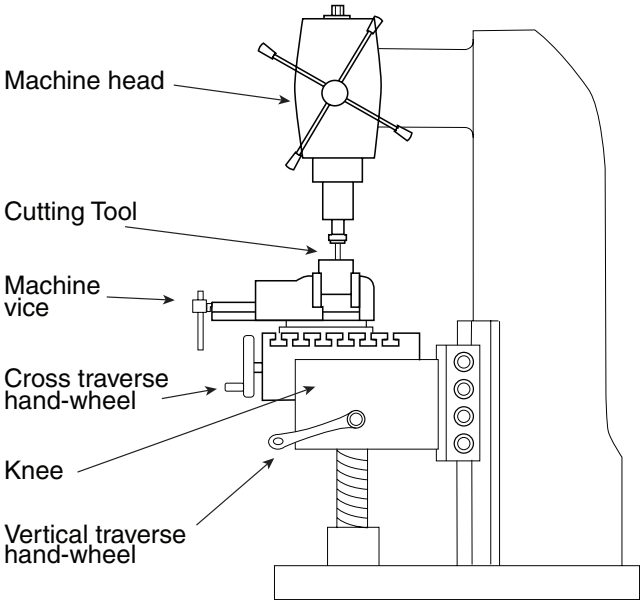

FIGURE 112 Vertical miller

Grinding Machine

A grinding machine will grind to closer tolerances and provides a better finish. The double-ended bench machine is the most common type of grinding machine which consists of fine abrasive stones/wheels. In order to support the item being crushed, tool rests are fitted in front of each wheel.

FIGURE 113 Grinding machine

The precautions and steps that are to be followed are given below.

Always wear protective goggles when using the grind machine.

Do not grind soft materials such as aluminium, brass and so on.

The items being sharpened must be kept cool by dipping in water or oil.

Never use the side of the wheel when grinding. Instead, move the item from side to side in order to avoid forming ridges on the wheel.

Ensure the tool rests are closer to the wheel as possible, but not touching it.

The stones/wheels must be regularly cleaned and maintained flat.

The Guillotine

The guillotines machines either self-standing or bench mounted and are used for cutting sheet steel, aluminium and so on. These machines allow

only thin gauge metal to be cut, thus preventing fingers getting caught by the blade. Generally both hands are used to operate guillotines.

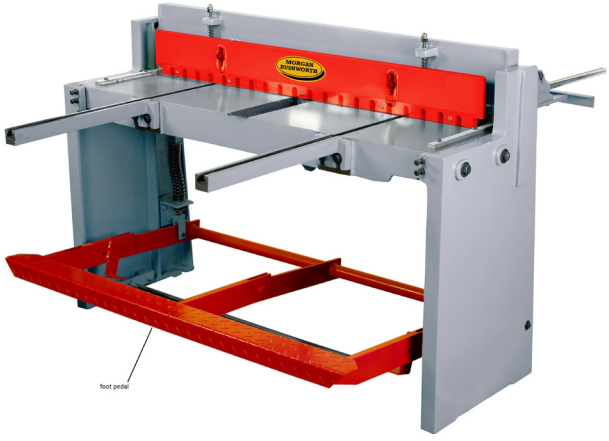

FIGURE 114 Guillotine

Folding Machine

The folding machine is used to fold metals that are flexible enough to be bent. The counterweights on the machine allow for the significant weight of the folding blade. Care must be taken to ensure that the metal is not cracked in the folding process.

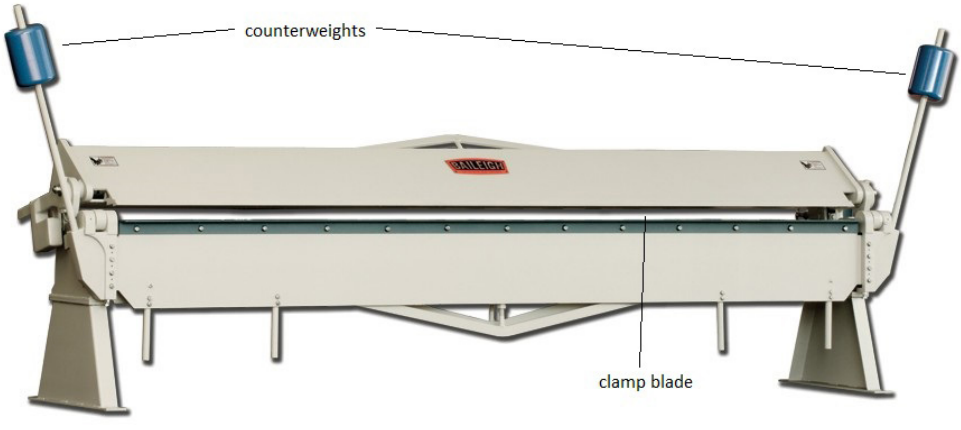

FIGURE 115 Folding machine

Fly Press

Fly press is used to stamp out small sheet parts by a downward force of the stamping head. When the handle is pulled, the masses provide momentum and the male die can be wound down quickly into the female die, thus pressing out a shape in sheet metal sheet .

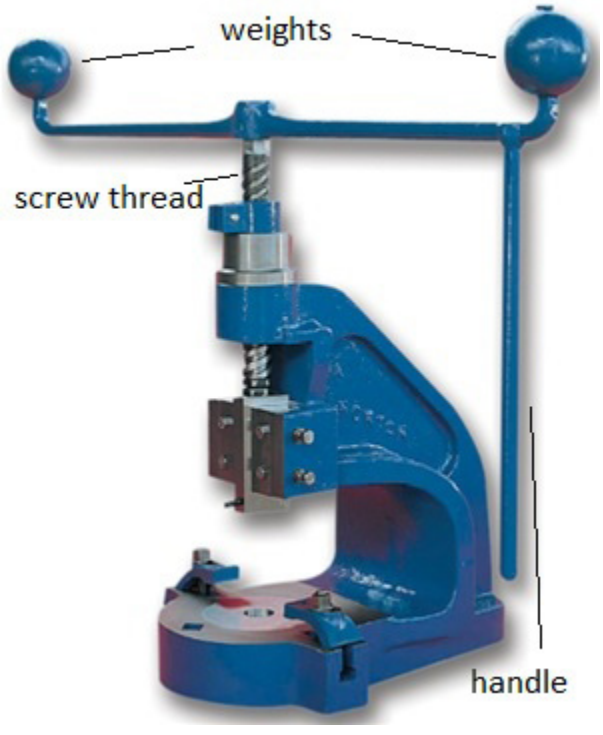

FIGURE 116 Fly press

Powered Hand Tools

Powered tools must be handled with utmost care as because they can injure, and in exceptional cases, can cause death if they are incorrectly operated. Before using any powered machine/tool, personnel must make sure that:

They have been properly trained and are currently authorized to use it

All protective guards and fences are securely in place

No part of the body or clothing can come into contact with moving parts

Protective clothing is fastened and neck ties (if worn) are tucked in or removed

All rings and other jewellery must be removed

Safety glasses/goggles are worn wherever there is a debris risk

Where necessary, the appropriate fire extinguisher is readily hand

A safety mat is available to stand on where electrical machinery is used

Machinery is checked for any "Warning" notices indicating it is unsafe for use.

Possibly the most common method of powering tools is through the use of electricity, which is readily available from the AC mains supply and can also be provided from portable, DC batteries. However, because of the fire hazard, associated with the operation of electrically powered tools and where there is a possibility of flammable vapours being present, pneumatically powered hand tools are provided for aircraft maintenance tasks such as drilling, cutting, shaping, screw driving, riveting, nut running and setting. These pneumatic tools may be operated from a fixed air supply gallery in a workshop or hangar or from a mobile air compressor.

Torches

The torches that are used must be spark proof and approved for use in aircrafts. They may be rechargeable or battery operated

FIGURE 117 Torch

LED Lights

In aviation, these lights are used in various areas such as dockyards, aviation towers and so on. They must not be passed over liquid of any kind or over sharp edges and must be thoroughly inspected at frequent intervals.

FIGURE 118 LED light

Electric Drills

Electric drills are used only in workshop and maintenance areas but not generally used on aircrafts because of the electric sparks. A gearing system is present to enhance the speed ranges and may also be used as a screwdriver with the required speed.

FIGURE 119 Electric drill

Battery Operated Drills

These cordless drills are powered by rechargeable batteries and can be used in remote locations away from a power source.

FIGURE 120 Battery operated drill

Pneumatic Drills

It is driven by compressed air stored in small cylinders with the air pressure ranging from 60-100psi. The air valve controls the mechanism with a straight or angled drive. They are safer to run and are preferably used around places with flammable materials.

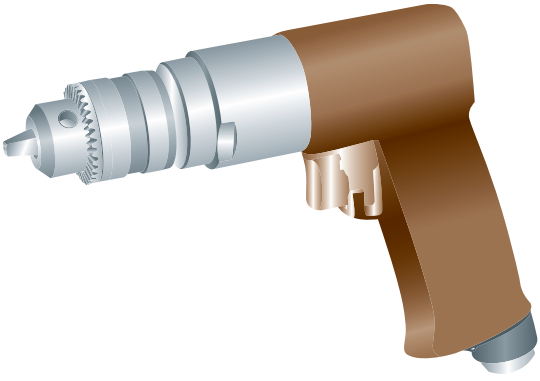

FIGURE 121 Pneumatic drill

Pneumatic Riveting Hammers

These hammers are available in different shapes and sizes with the air pressure ranging from 60-100psi. The pressure causes the steel plunger to move up and down inside the barrel, thus striking a rivet snap. Before starting the job, determine the strength of the hammer by placing the snap and operating against a firm wooden block. Never operate the hammer without the snap being supported, as the spring loosen and injure someone.

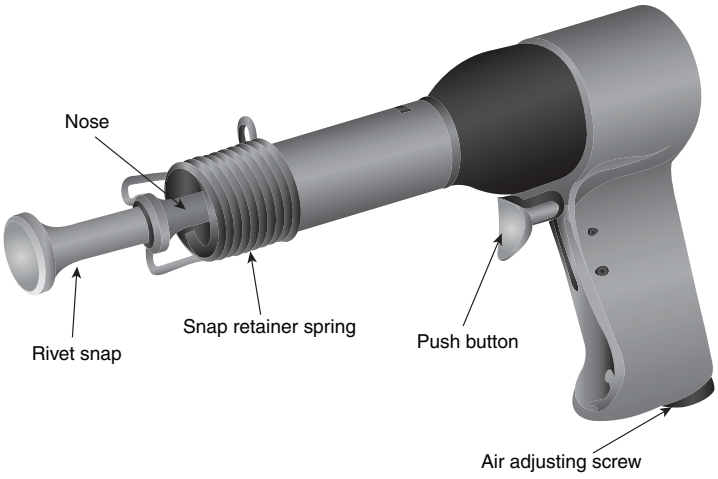

FIGURE 122 Pneumatic riveting hammer

AEROCHAPTER®